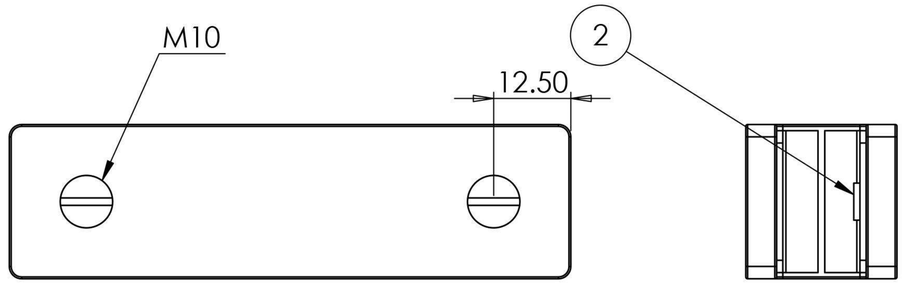

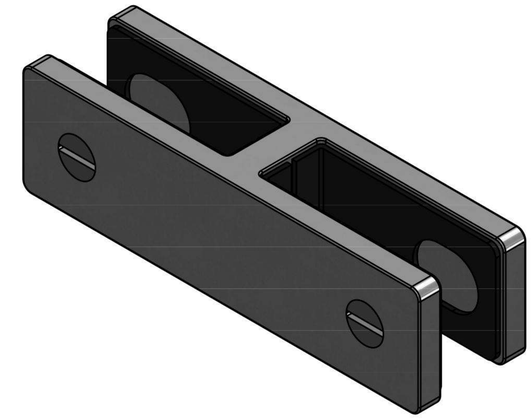

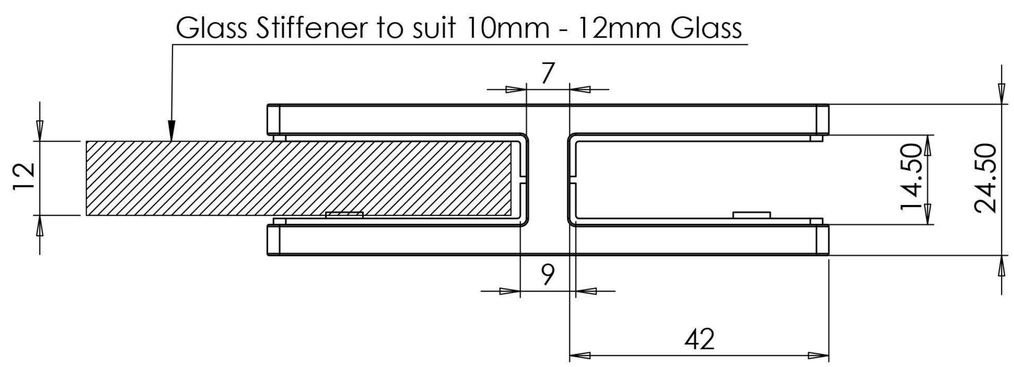

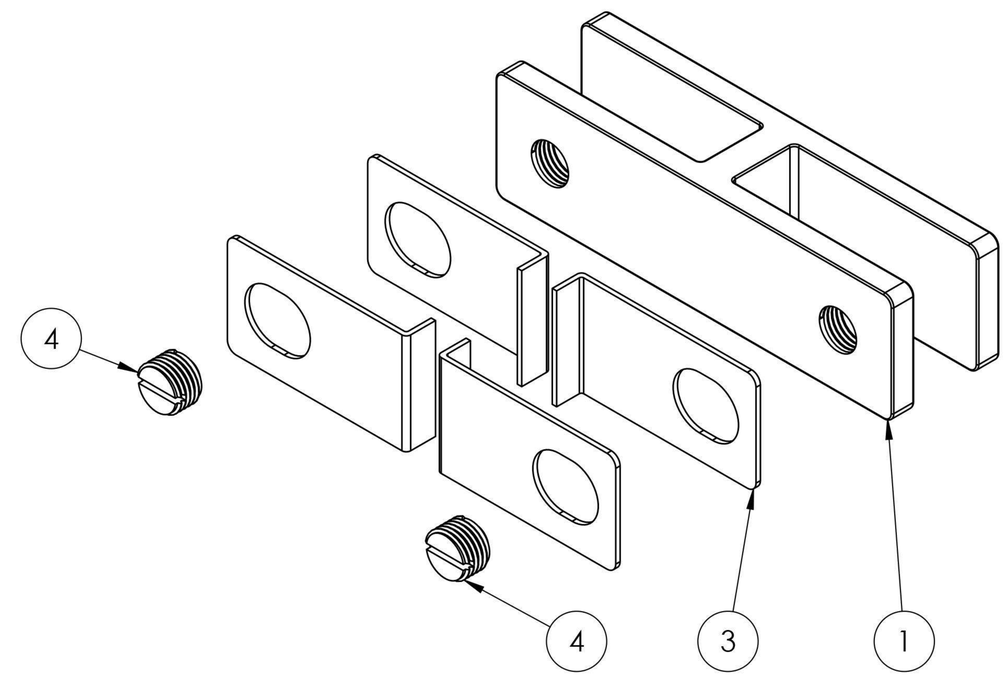

ITEM NO.	PART NUMBER	DESCRIPTION	QTY.
1	182242212	180 Degree Bracket 10mm - 12mm glass	1
2	182242212 Part3	Rubber	2
3	182242212 Part2	Black Plastic Gasket	4
4	182242212 Part1	Flat Head Screw	2