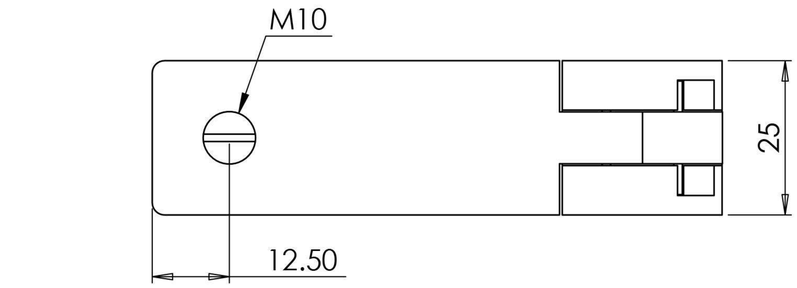

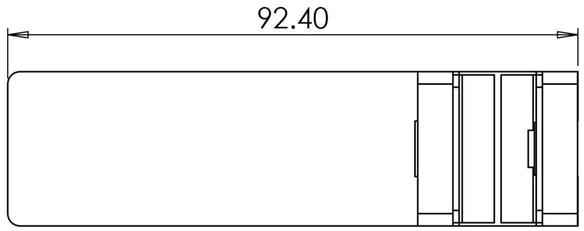

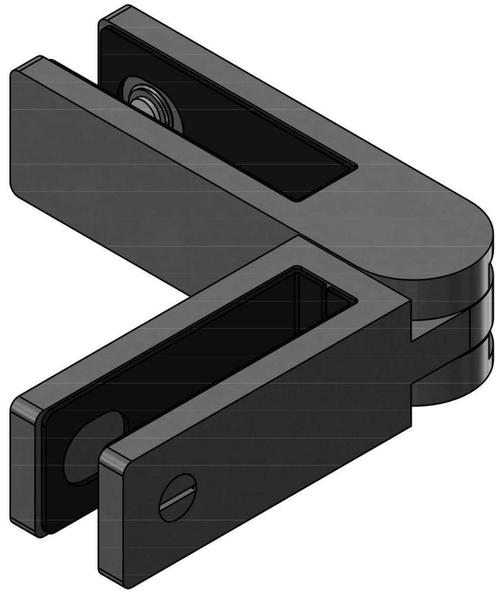

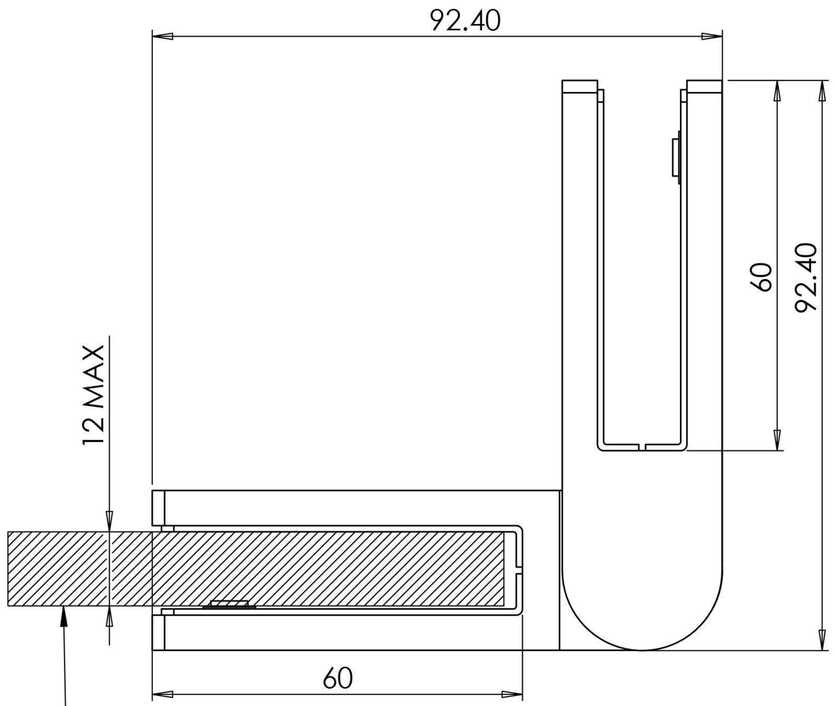

Glass Stiffener to suit 10mm - 12mm Glass

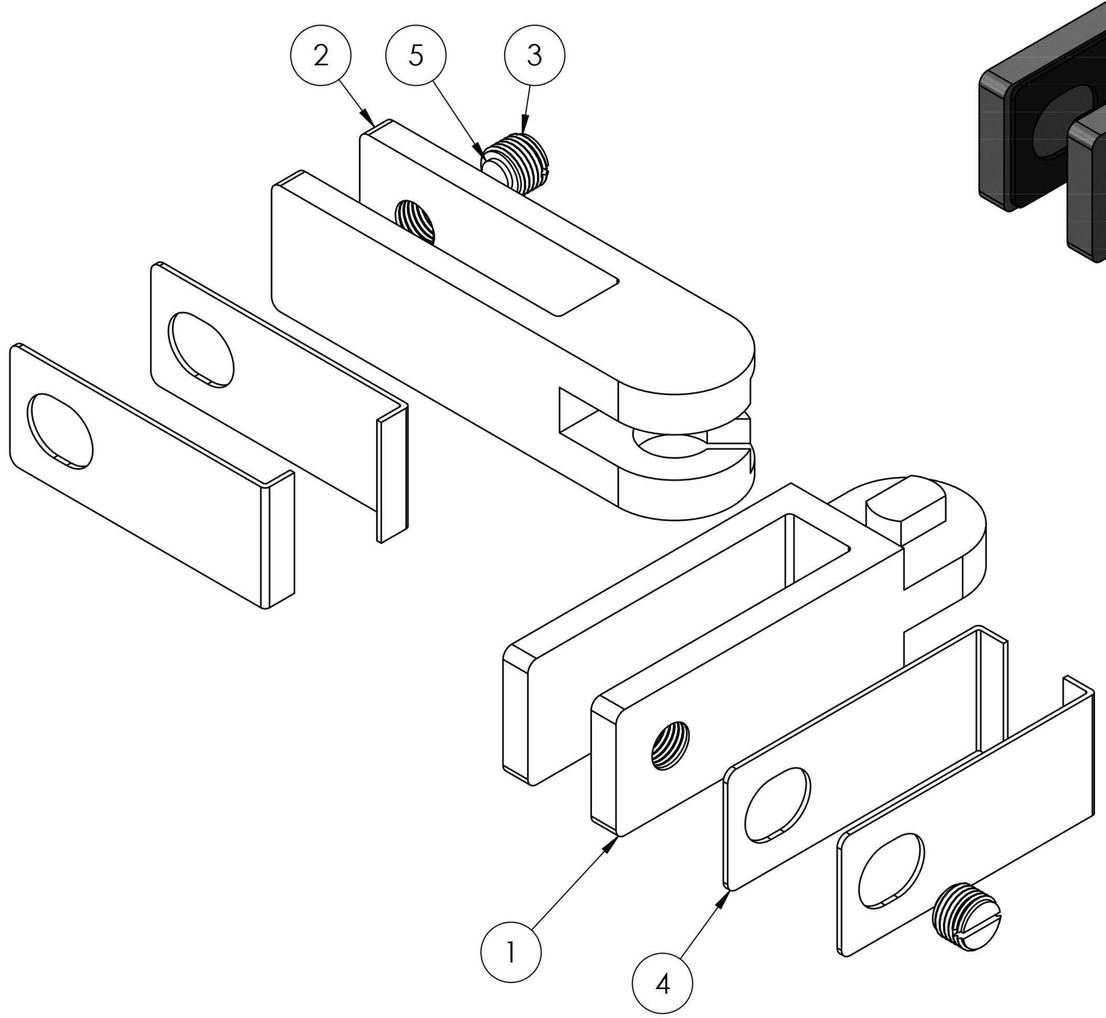

ITEM NO.	PART NUMBER	DESCRIPTION	Fixed /QTY.
1	182242312 Part2	Male side of adjustable bracket 90 - 180 degree	1
2	182242312 Part1	Female side of adjustable bracket 90 - 180 degree	1
3	182242312 Part3	Flat Head Screw	2
4	182242312 Part4	Black Plastic Gasket	4
5	182242312 Part5	Rubber	2